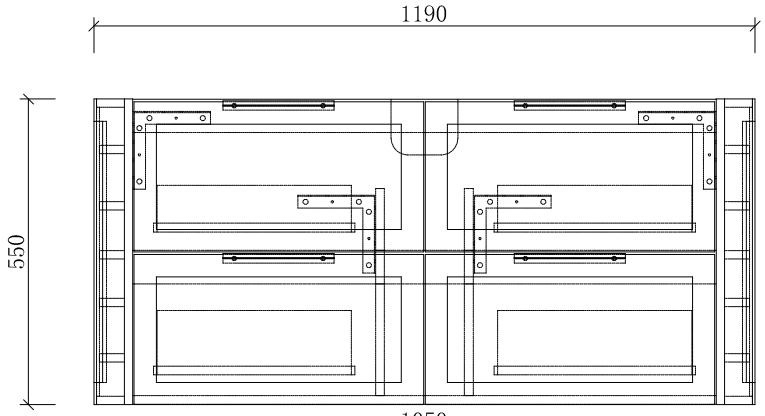


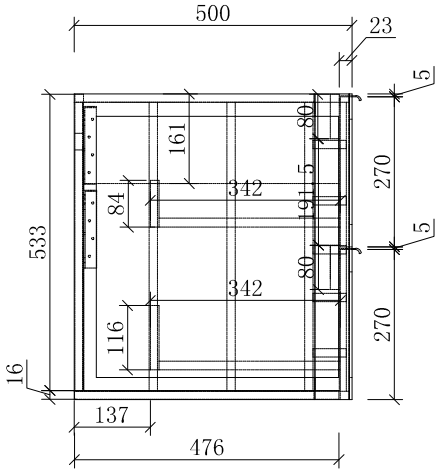


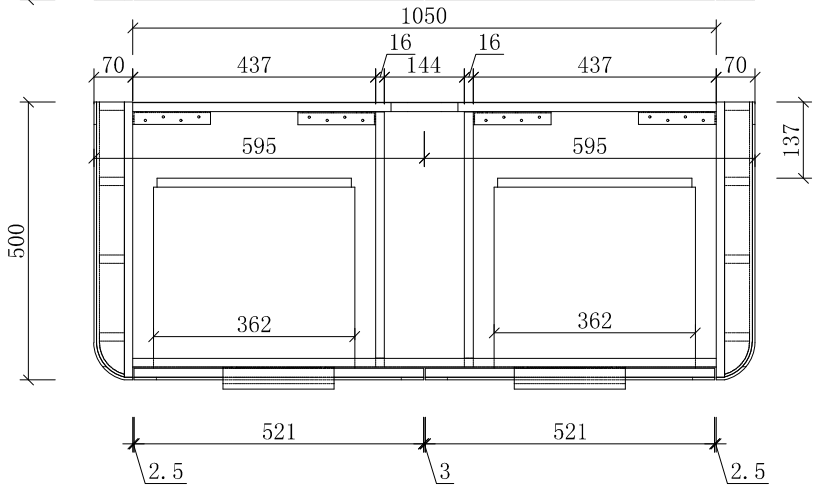


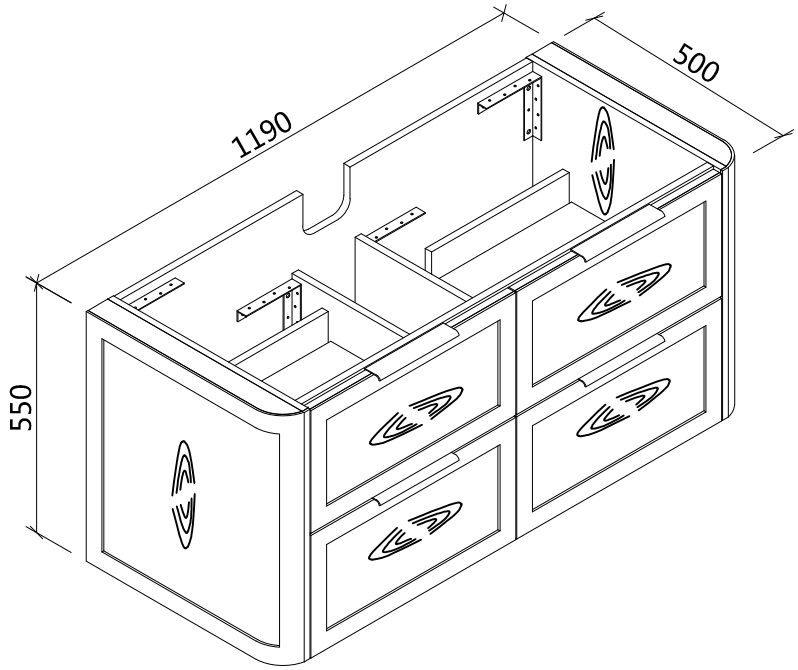


# Darlington-1200