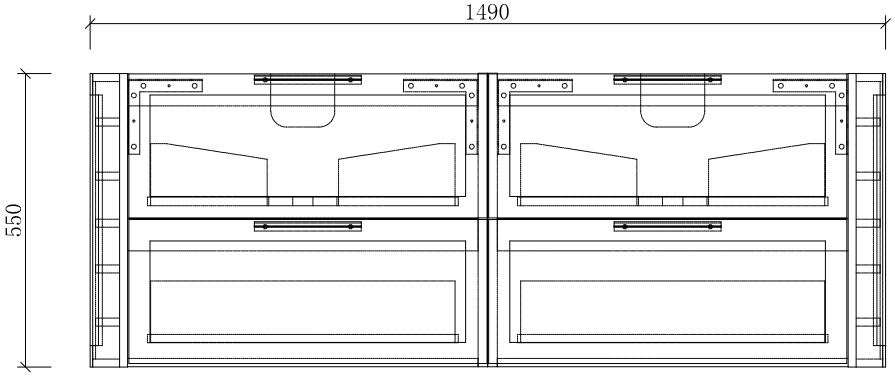

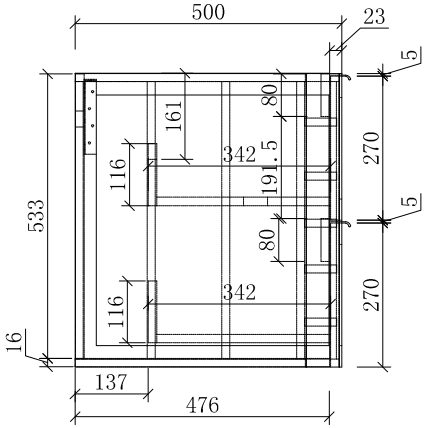

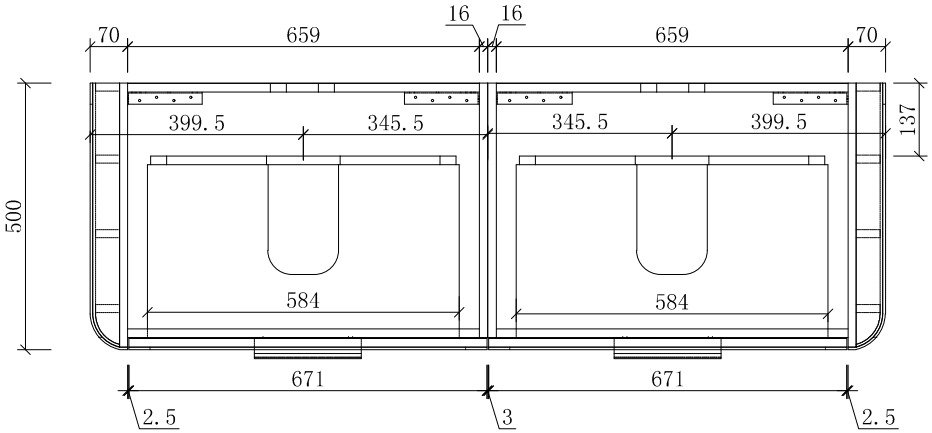

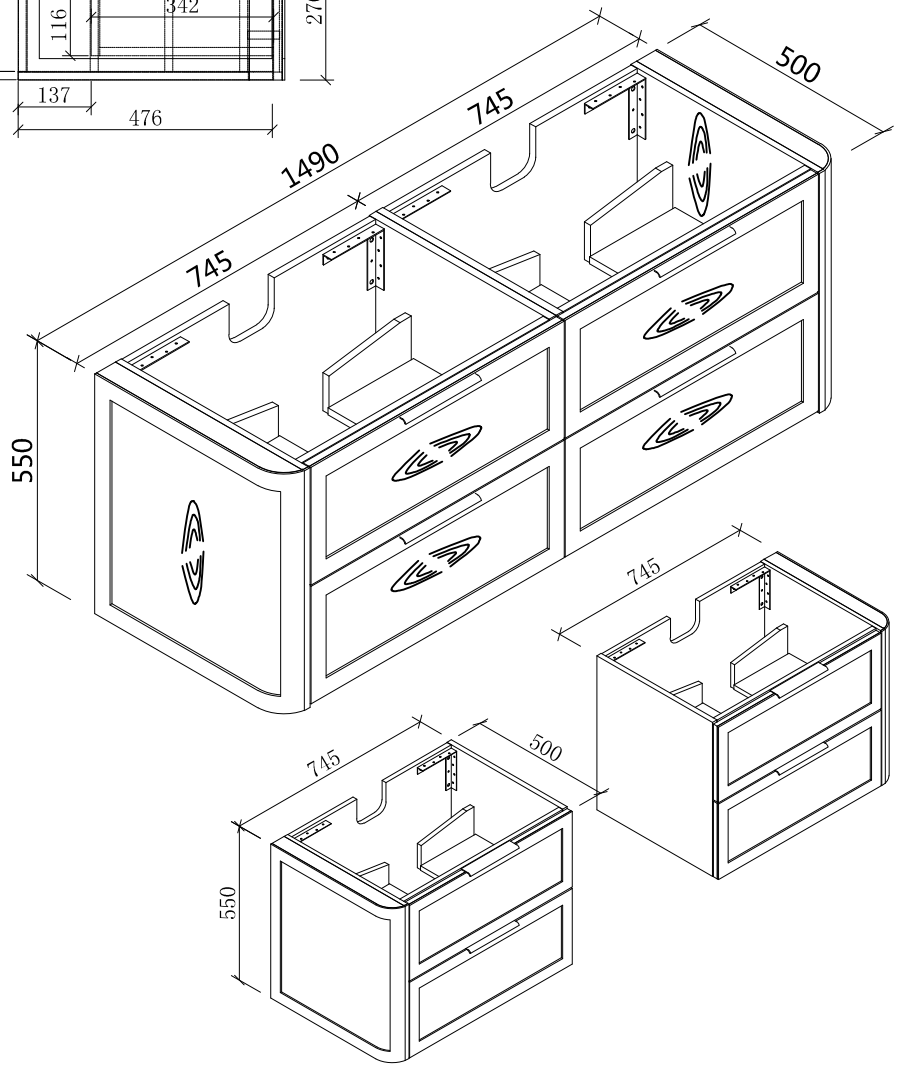

Darlington-1500